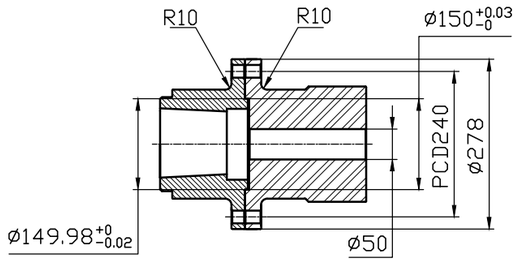

OUTPUT SHAFT COUPLING & PROPELLER COUPLING DIMENSION

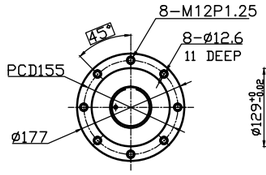

INPUT COUPLING DIMENSION

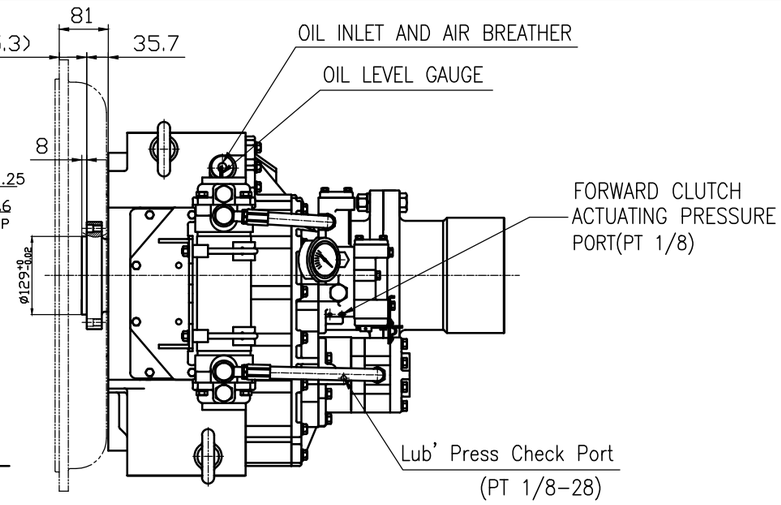

DMT280H MARINE TRANSMISSION SPECIFICATION		
GEAR RATIO	2.06, 2.50, 2.92, 3.26	
TOTAL WEIGHT	APPROX. 490 Kg(DRY)	
OIL CAPACITY	APPROX. 8 L	
OIL VISCOSITY	SAE # 30	
OIL PRESSURE	1.96 ~ 2.54 MPa	CLUTCH OIL
DIRECTION OF ROTATION IN FORWARD	INPUT	C.C.W VIEWED FROM THE STERN
	OUTPUT	C.W VIEWED FROM THE STERN
OIL CHANGE INTERVAL	THE FIRST 100HOURS OF INITIAL OPERATION	
	AND EVERY 1000HOURS THEREAFTER	
SHIFTING LIMIT	UNDER 50% OF THE RATED ENGINE SPEED	
OIL COOLER	WATER FLOW 60 ~ 80 L/min	
	TEMPERATURE OF COOLING WATER	MAX 32°C
OPERATING TORQUE OF SHIFTING LEVER		UNDER 2.94Nm

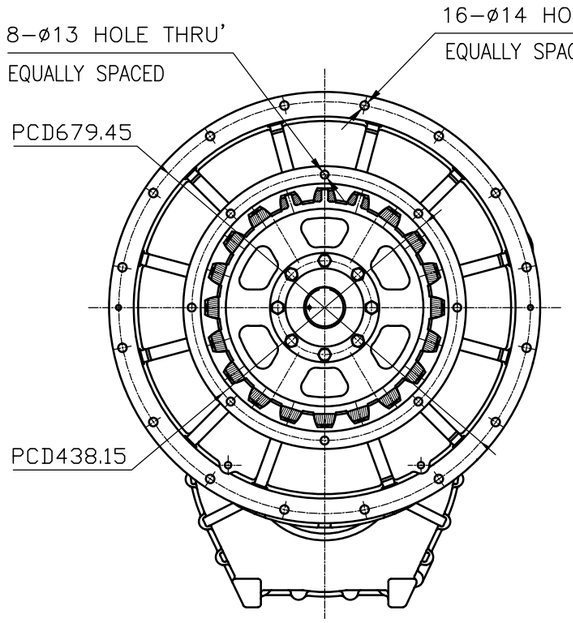

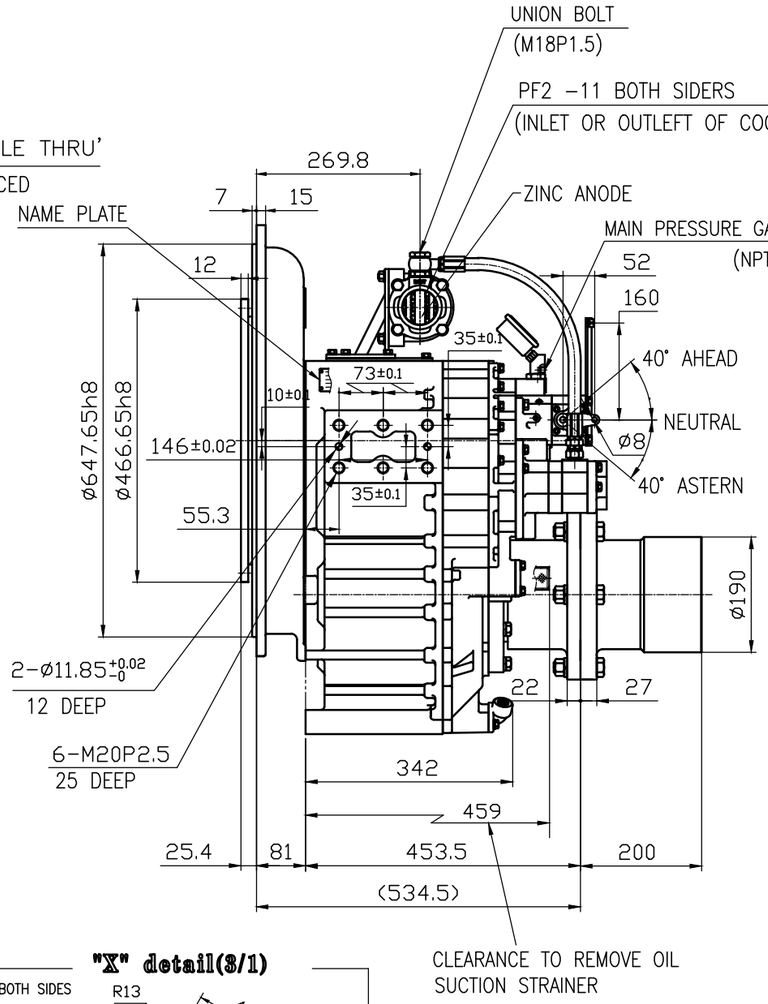

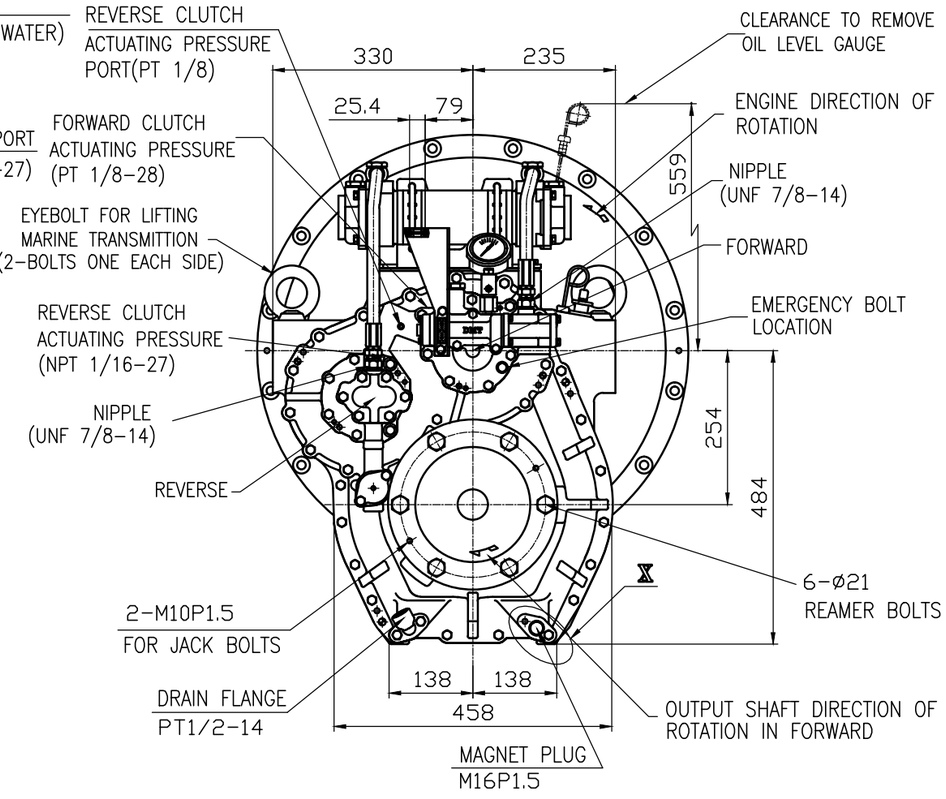

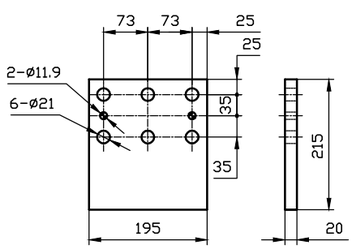

BRACKET DIMENSION

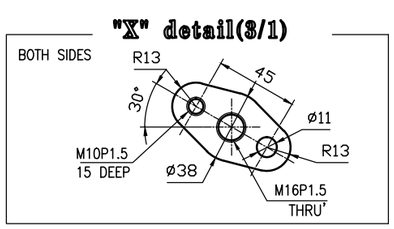

REMARK
1.HOUSING: SAE#0
2.DRIVING RING: SAE 14"
3.COULING TYPE : RUBBER

공통공차 TOLERANCE ON		
분수 FRACTIONS	소수 DECIMALS	각도 ANGLES
± —	± —	± —

일반공차 절삭가공				
구분		조급	중급	정급
1 초과	4 이하	± 0.3	± 0.1	± 0.05
4	16	± 0.5	± 0.2	± 0.07
16	63	± 0.7	± 0.3	± 0.1
63	250	± 1.2	± 0.5	± 0.2
250	1000	± 2.0	± 0.8	± 0.3

번호 NO.	품번 PART NO.	품명 PART NAME	개수 Q'TY	재질 MATERIAL	규격 SIZE	비고 REMARKS

재질 MATERIAL	—		형식 TYPE: DMT280H
	작성 DATE 2013.02.12	척도 SCALE 1/1	원도번 ORIGINAL DWG. NO.
품명 NAME: MARINE TRANSMISSION			
승인 APPROVED BY: JK.Kim	검도 CHECKED BY: KS.Han	제도 DRAWN: KC.Yoon	설계 DESIGNED
도번 DWG. NO.: 28000GA~D-014RC			개정(REV.): 000
D-I INDUSTRIAL	크기 SIZE: A3	코드번호 CODE ID. NO.	

동이기술-004(841×594)